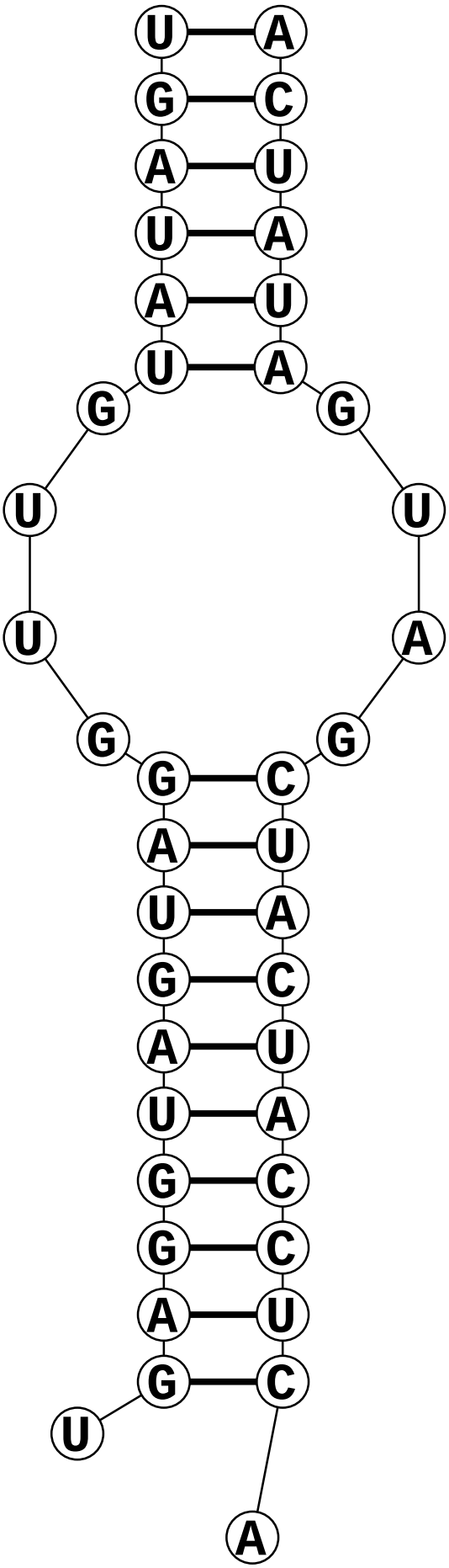

ENERGY = -23.1 04/06/26 20:07:27_ 0...