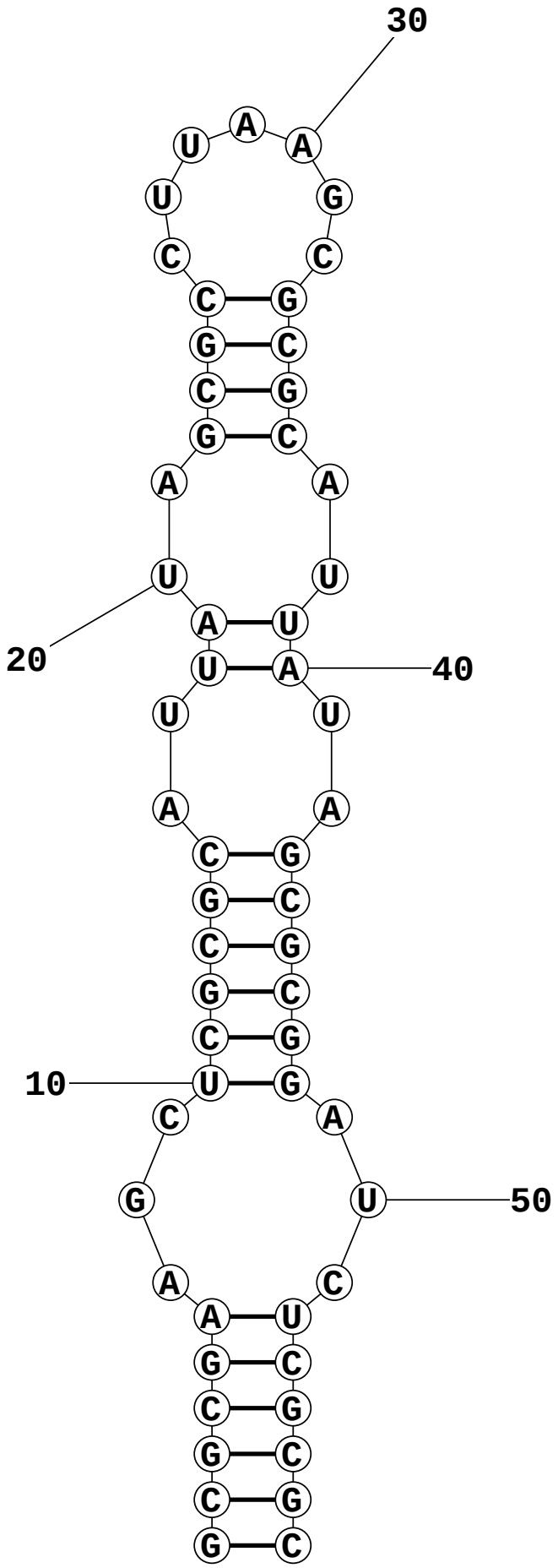

ENERGY = -49.9 RNA