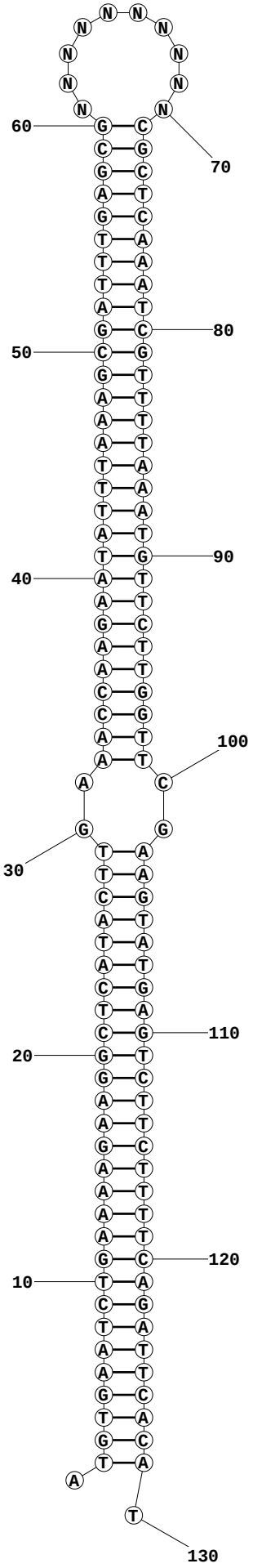

ENERGY = 12.7 02/19/26 10:36:02