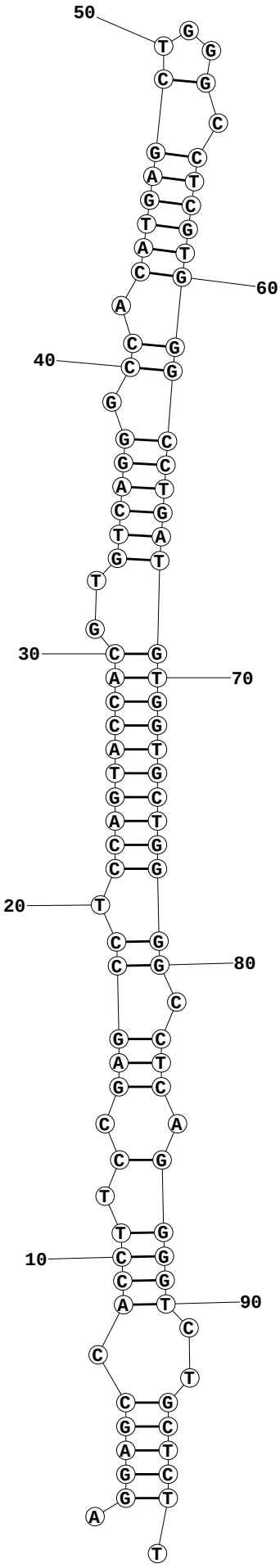

ENERGY = -57.4 NR_030528.1 Homo sap...