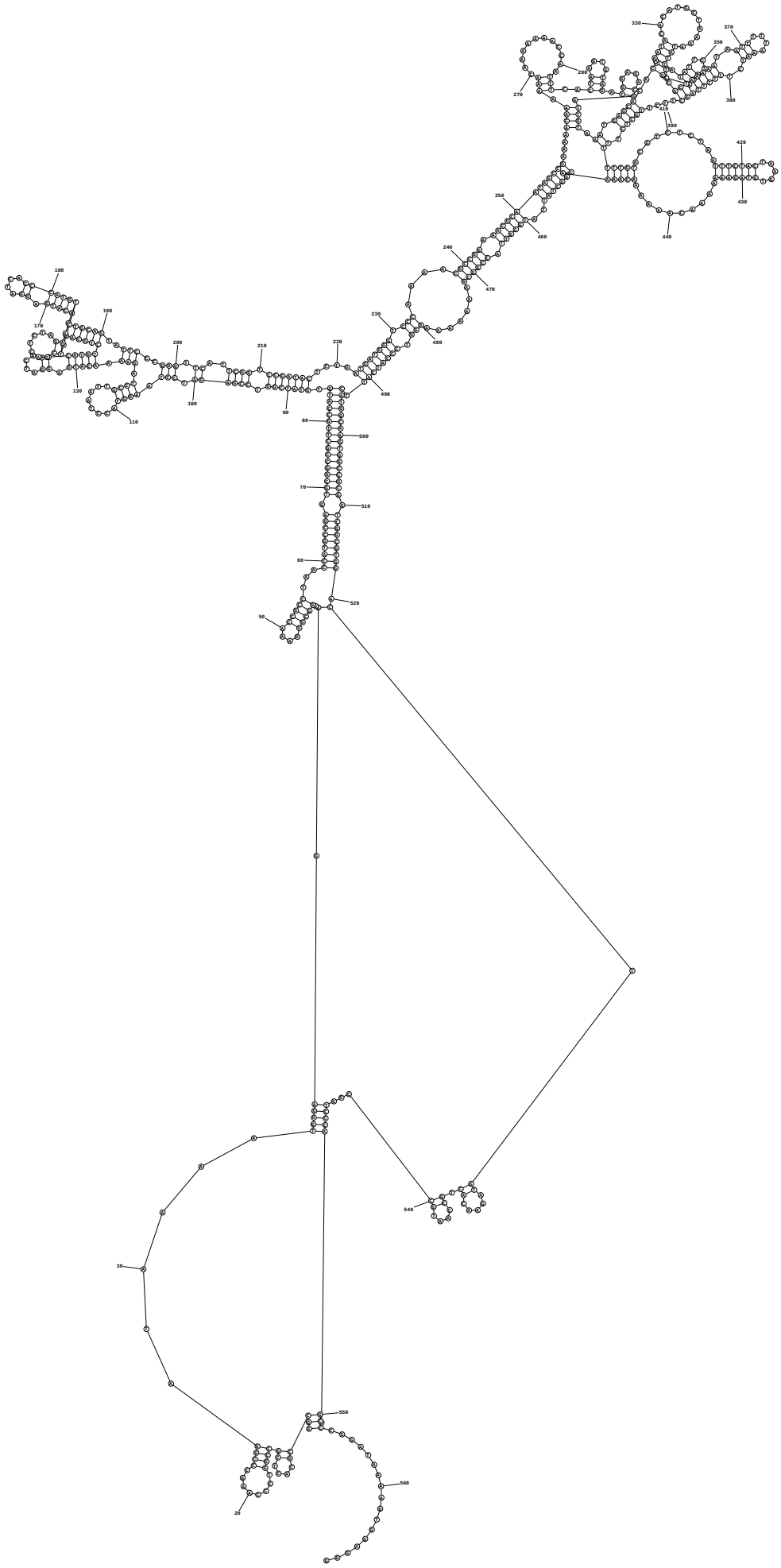

ENERGY = -120.3 ms2