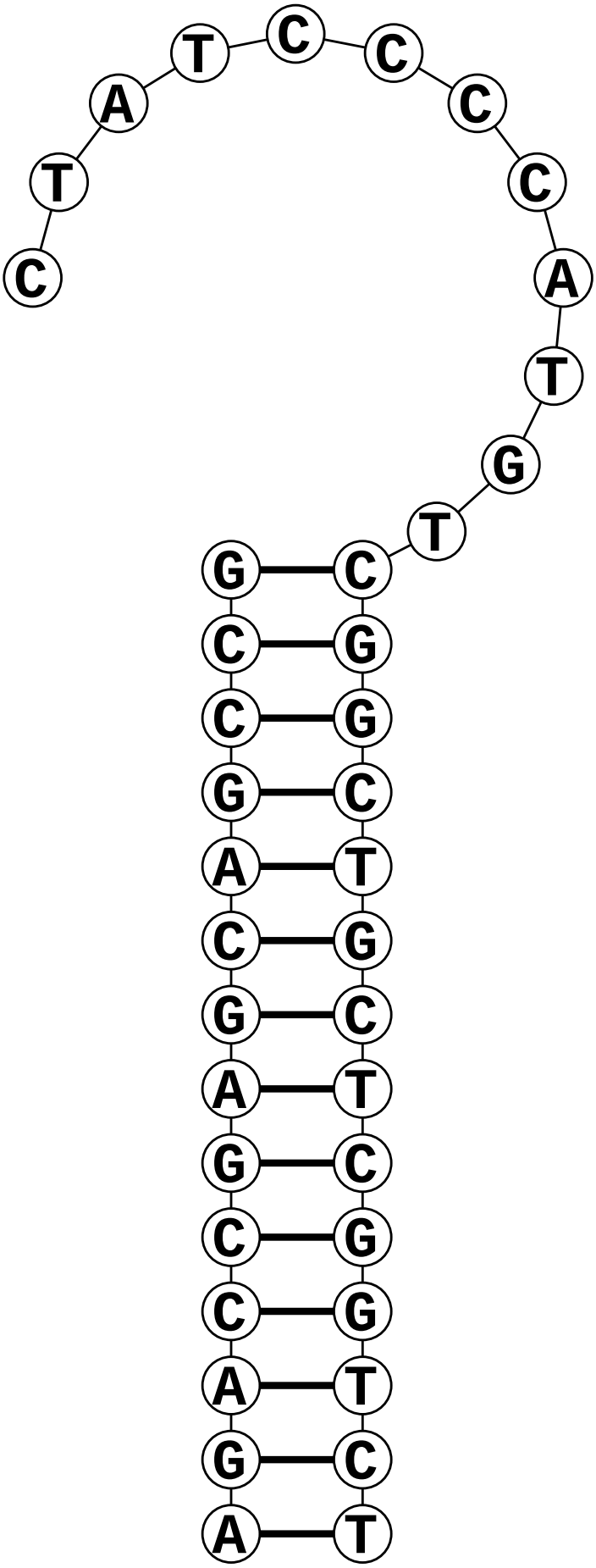

ENERGY = -29.1 pRNA_ tRNA