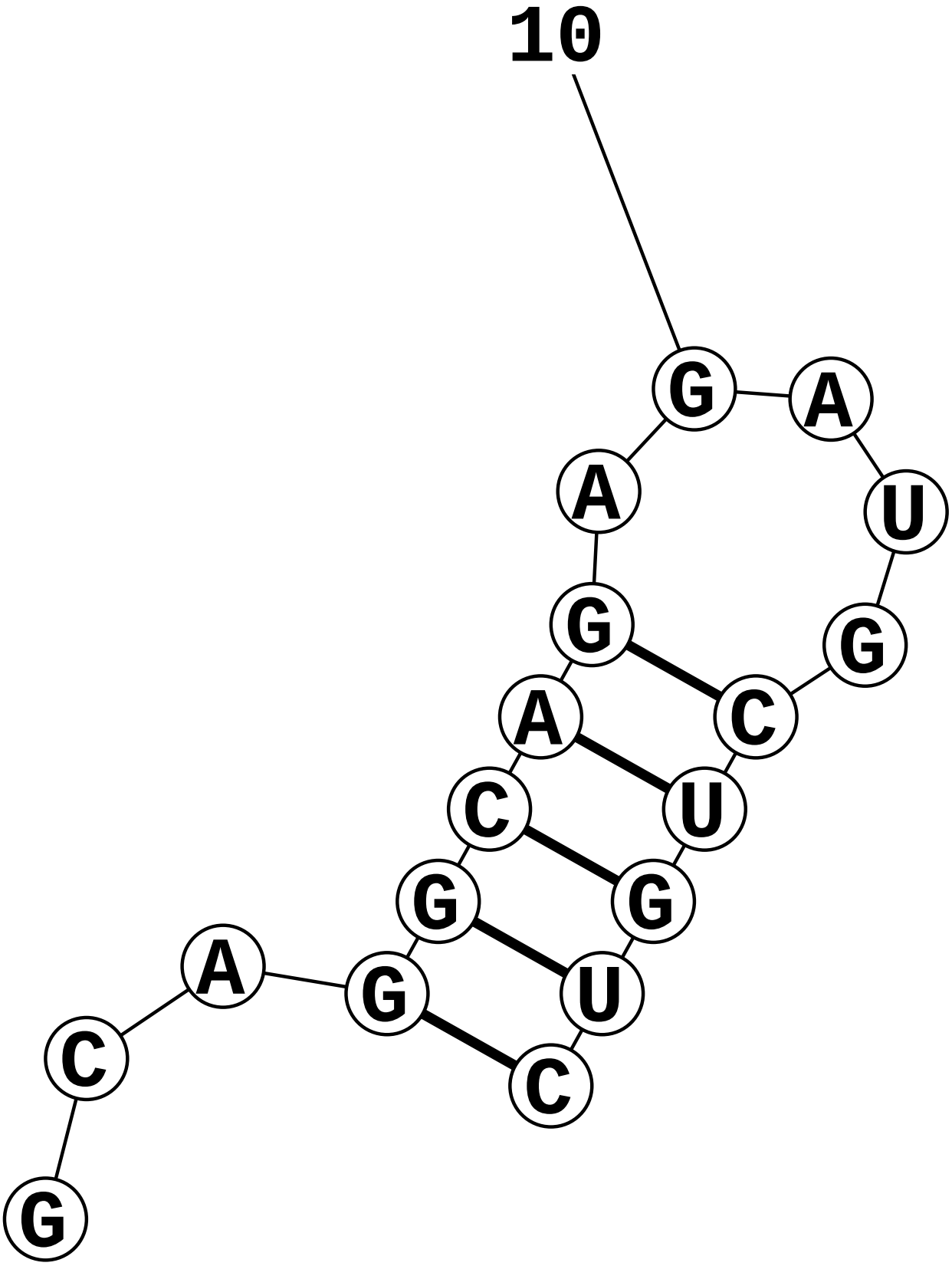

ENERGY = -4.0 02/10/26 15:38:25

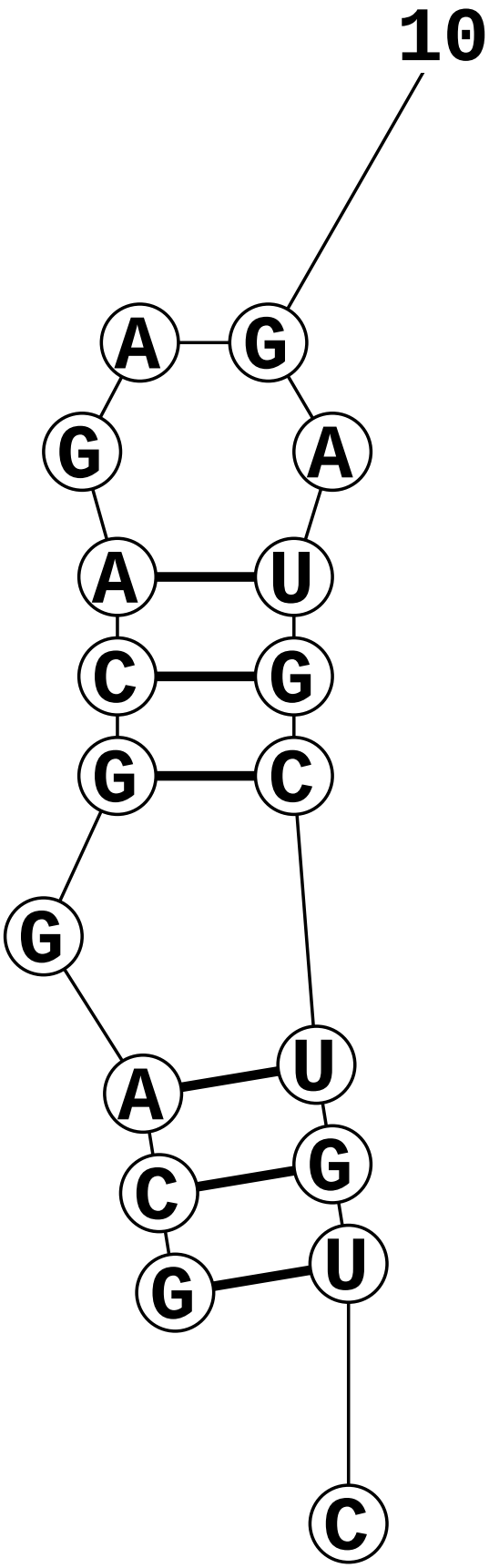

ENERGY = -4.0 02/10/26 15:38:25

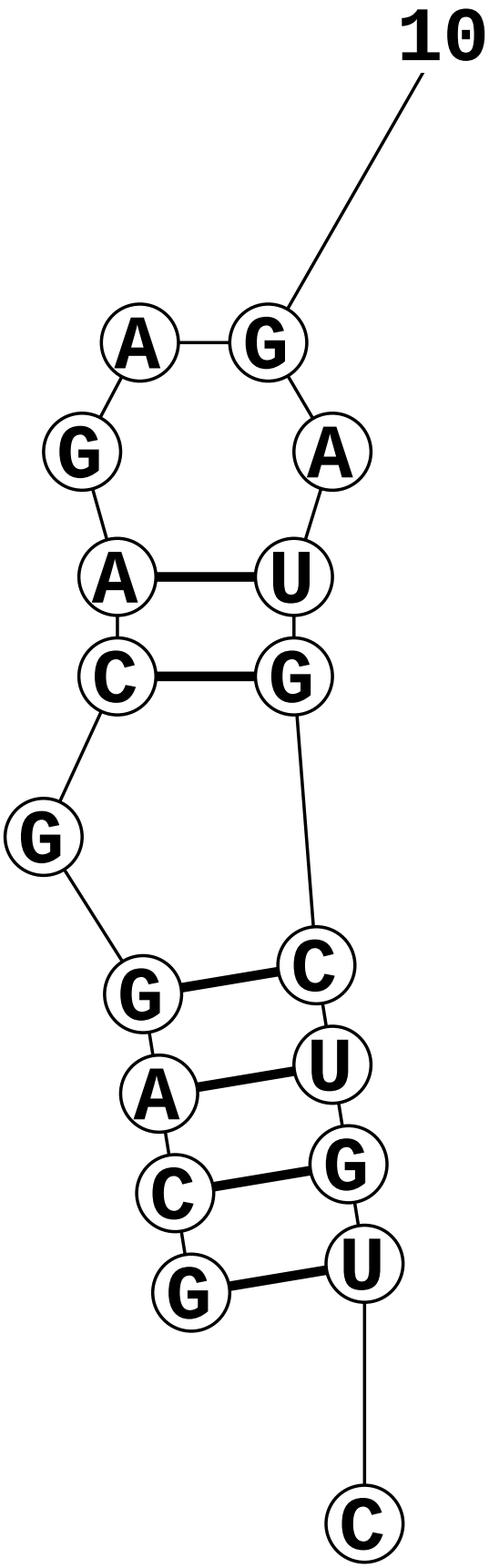

ENERGY = -4.0 02/10/26 15:38:25

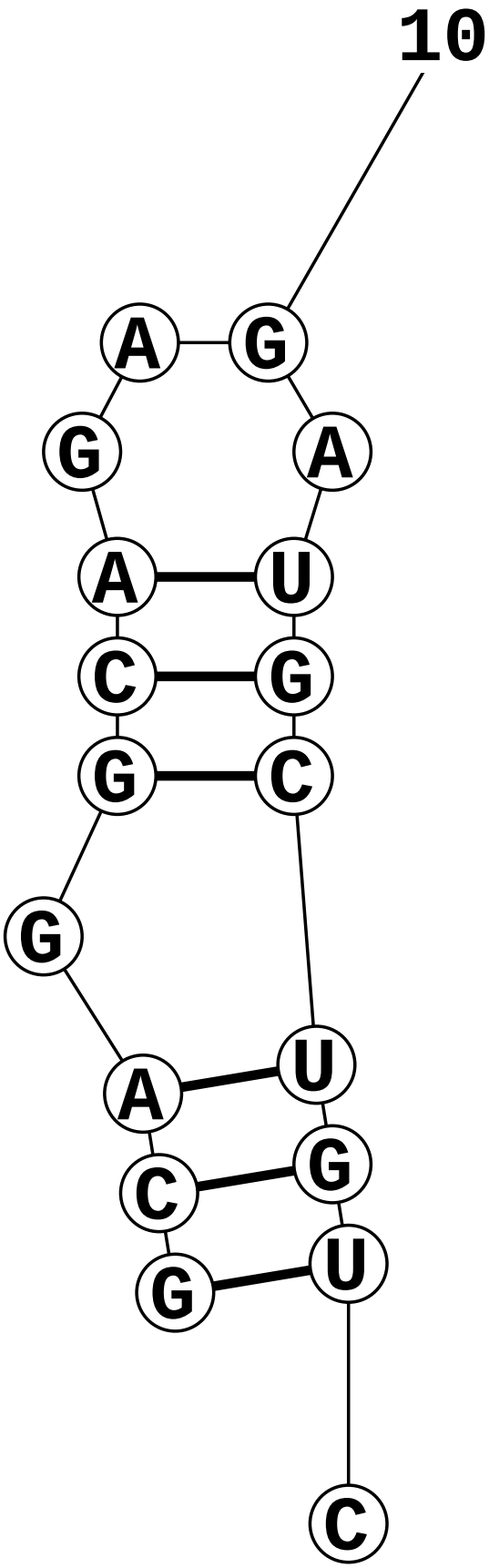

ENERGY = -3.9 02/10/26 15:38:25

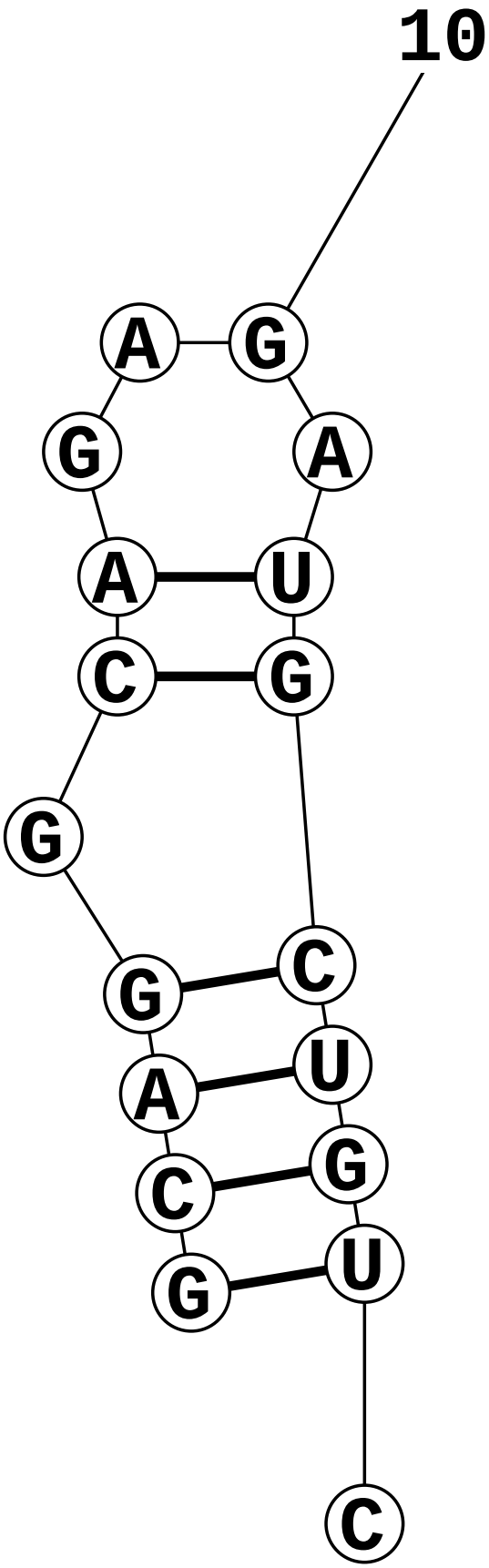

ENERGY = -3.9 02/10/26 15:38:25

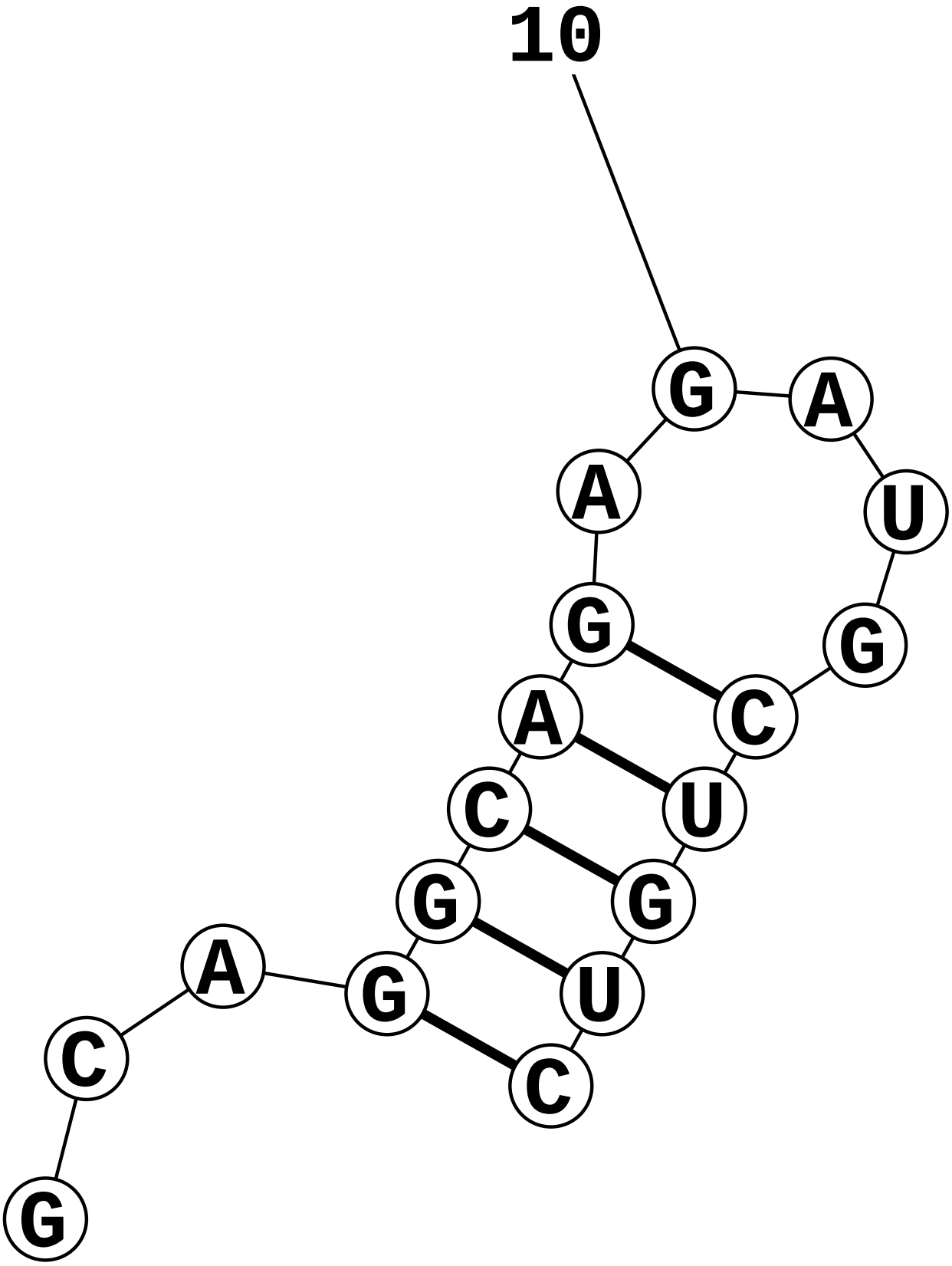

ENERGY = -3.8 02/10/26 15:38:25